ProTech903™ Tape Analyzer

H2S, Total Sulfur, Arsine, Phosphine, Phosgene, and Chlorine

GALVANIC
APPLIED SCIENCES

The Only Tape Analyzer That Rivals Laboratory Sensitivity When Monitoring Sub-ppm H_2S & Specialty Compounds

Advanced Analysis

- 0.005 ppm Detection Limit
- H_2S & Total Sulfur Multi-Parameter

Hazardous Area Certified

- Class I Division 2 and Division 1
- ATEX / IECEx Zone 1

Maintenance Friendly

- 30 Seconds to Alarm
- Quick & Easy Excursion Recovery

Expanded Applications

- Arsine for Ethylene Cracking Plants
- Chlorine in Chlorine Absorption Units

ProTech903™ Tape Analyzer

H2S, Total Sulfur, Arsine, Phosphine, Phosgene, and Chlorine

GALVANIC APPLIED SCIENCES

ProTech903™ Tape Analyzer Introduction

ProTech903™ is a process analyzer that measures H_2S, total sulfur, and other compounds in gas-phase samples. ProTech903™ helps natural gas, refinery, and other industrial operators meet gas quality requirements and optimize process control.

ProTech903™ uses a special tape method to measure gas compounds. Monitoring the rate of change of stain development on tape allows ProTech903™ to calculate the concentration.

ProTech903™ is a 3rd-generation analyzer backed by Galvanic's 40 years of field-proven experience supporting gas processing industries.

0.005 ppm LDL for H_2S and Specialty Compounds

Lead-Acetate Tape Method

After sample is extracted, the gas is pressure regulated and filtered. Then the gas is humidified before coming in contact with the tape. A reaction occurs causing a stain on the tape. The darker the stain, the less light is reflected. The rate of change of the stain is proportional to the concentration.

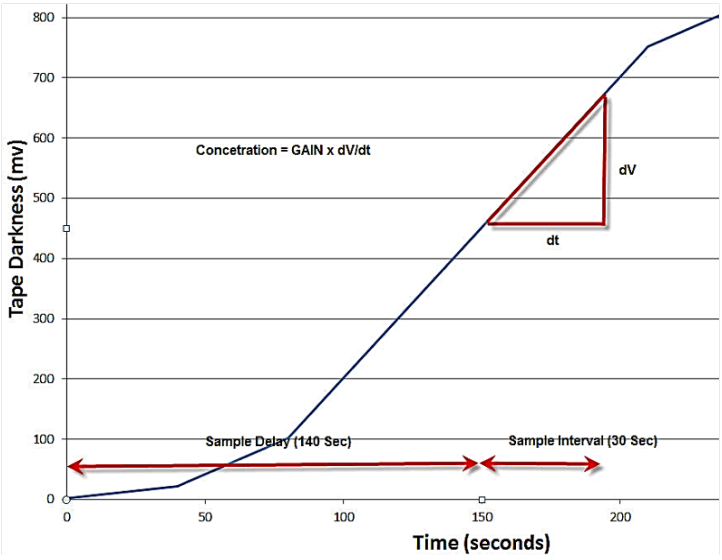

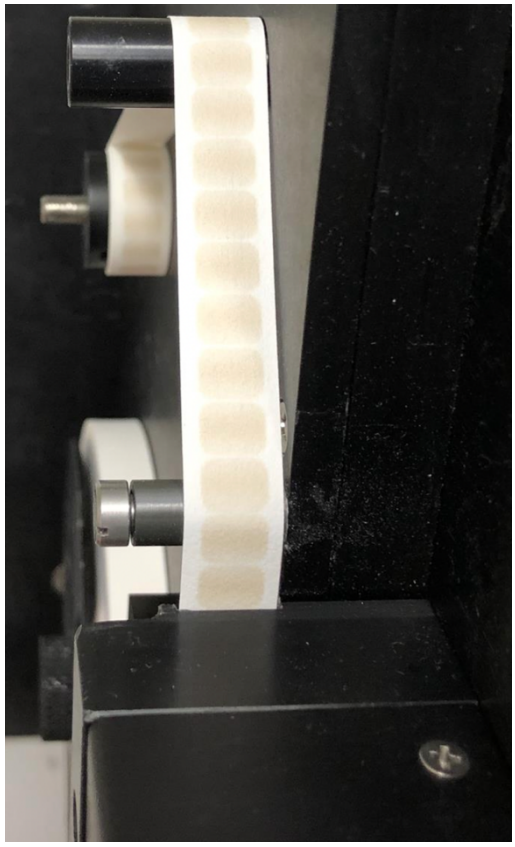

ProTech903™ Tape Analyzer

H2S, Total Sulfur, Arsine, Phosphine, Phosgene, and Chlorine

GALVANIC APPLIED SCIENCES

Tape

Calibration Gas

Sample In

Fast-Loop

Hydrogen

Electronics

Total Sulfur Oven

H_2S & Total Sulfur Tape System

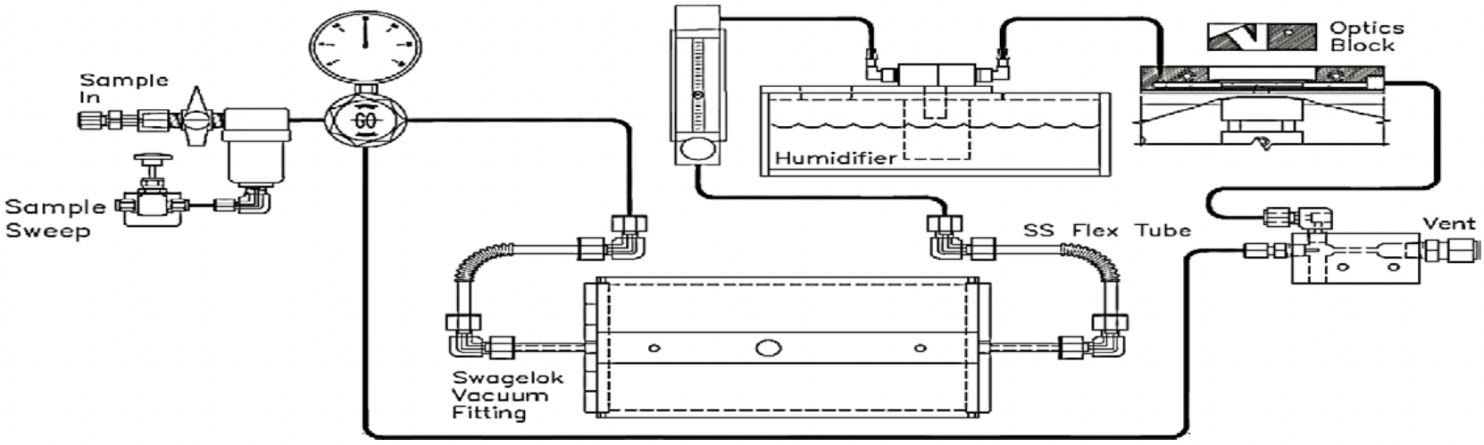

Key Components

ProTech903™ Tape Analyzer

H2S, Total Sulfur, Arsine, Phosphine, Phosgene, and Chlorine

GALVANIC
APPLIED SCIENCES

Specialty Gas Compounds

ProTech903™ is best known for accurately measuring H_2S and Total Sulfur. However, the analyzer can also be used to monitor non-sulfur gas compounds. Configurations are available for arsine, phosphine, phosgene, and chlorine.

The analyzer configuration is customized for each application. The humidifier will use deionized water instead of acetic acid, or will not include a humidifier at all. An alternate sensor block is used in some instances. The lead-acetate tape will be substituted by other specially formulated tapes.

ProTech903™ offers a color card calibration procedure when measuring these compounds since calibration gas can be difficult to source.

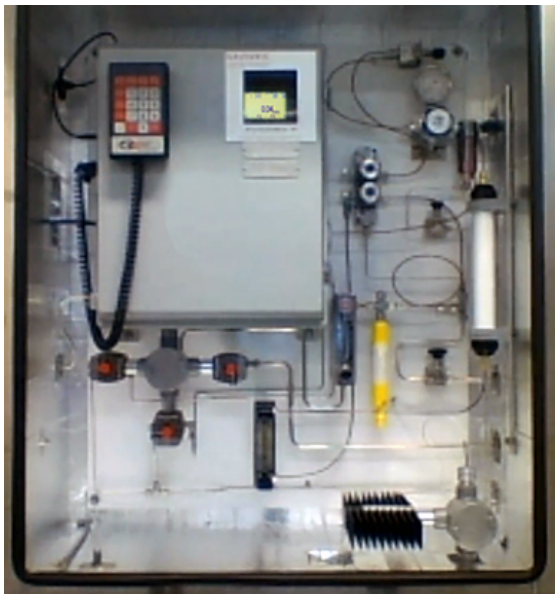

On-Board-Calibration Simplifies Operation

Hazardous Calibration Made Easy

ProTech903™ is the only tape analyzer that offers on-board-calibration (OBC) as a substitute for color card calibration. This system uses a calibration gas generator integrated with permeation tubes for accurate on-demand calibration.

In some cases, a carrier gas and temperature controller are used along with a flow meter in order to provide maximum accuracy.

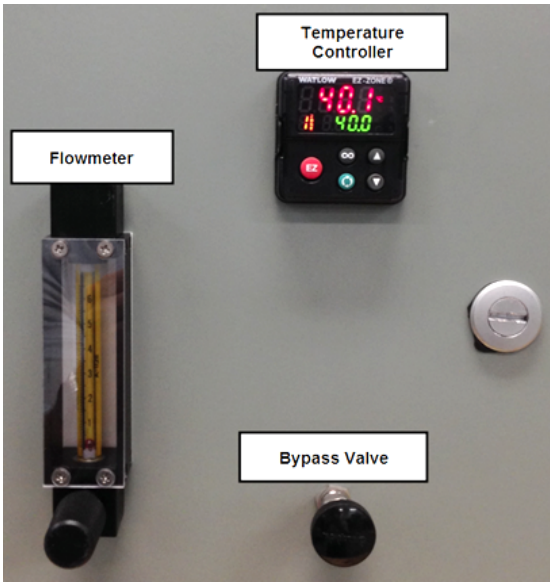

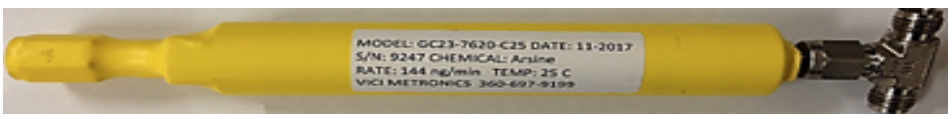

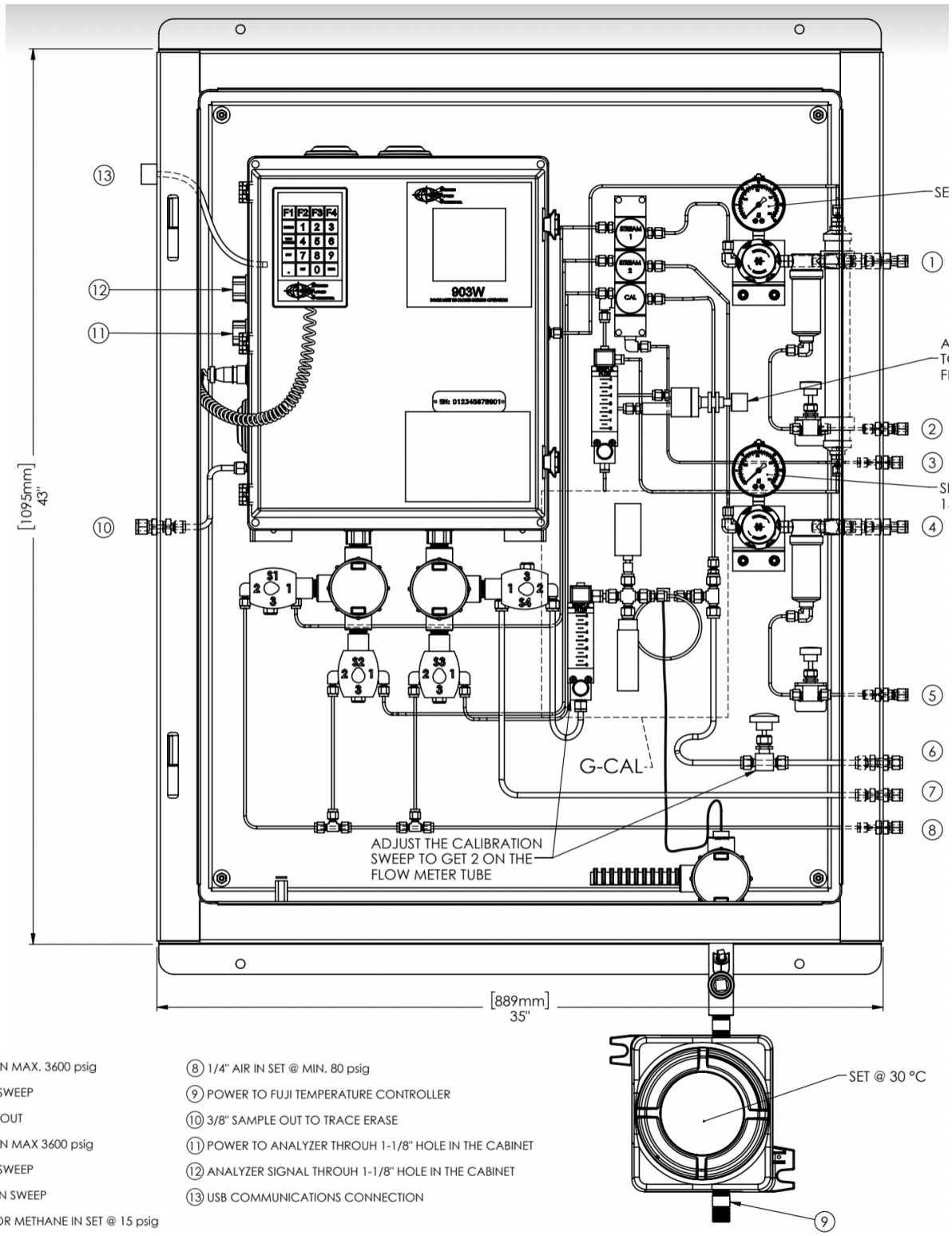

① 1/4" SAMPLE #1 IN MAX. 3600 psig
② 1/4" SAMPLE #1 SWEEP
③ 1/4" BLEED VENT OUT
④ 1/4" SAMPLE #2 IN MAX 3600 psig
⑤ 1/4" SAMPLE #2 SWEEP
⑥ 1/4" CALIBRATION SWEEP
⑦ 1/4" NITROGEN OR METHANE IN SET @ 15 psig
⑧ 1/4" AIR IN SET @ MIN. 80 psig
⑨ POWER TO FUJI TEMPERATURE CONTROLLER
⑩ 3/8" SAMPLE OUT TO TRACE ERASE
⑪ POWER TO ANALYZER THROUH 1-1/8" HOLE IN THE CABINET
⑫ ANALYZER SIGNAL THROUH 1-1/8" HOLE IN THE CABINET
⑬ USB COMMUNICATIONS CONNECTION

Engineering Drawing for Arsine & Phosphine Configuration (903W)

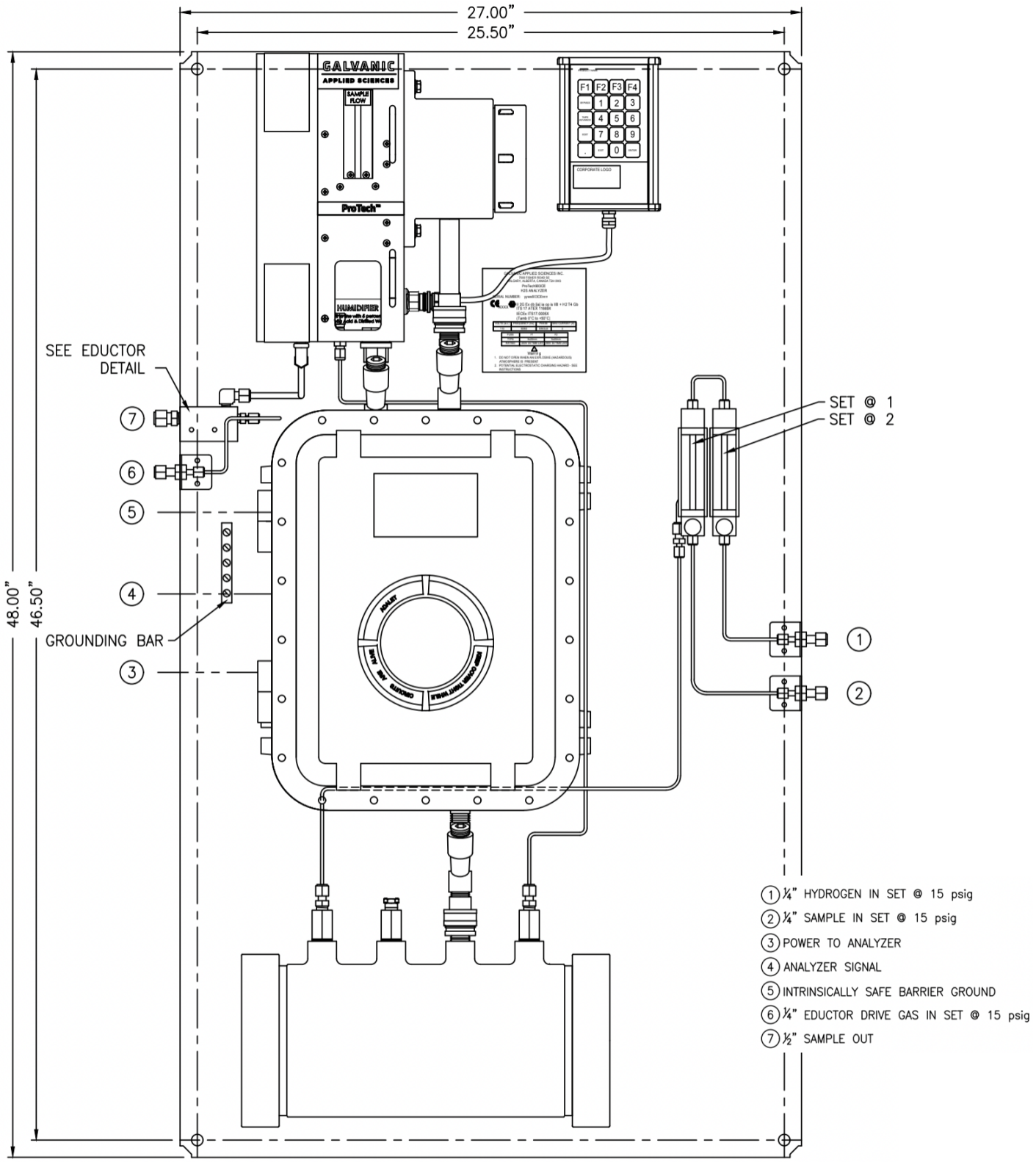

Engineering Drawing for ATEX / IECEx Zone 1 Configuration (903CE Total Sulfur)

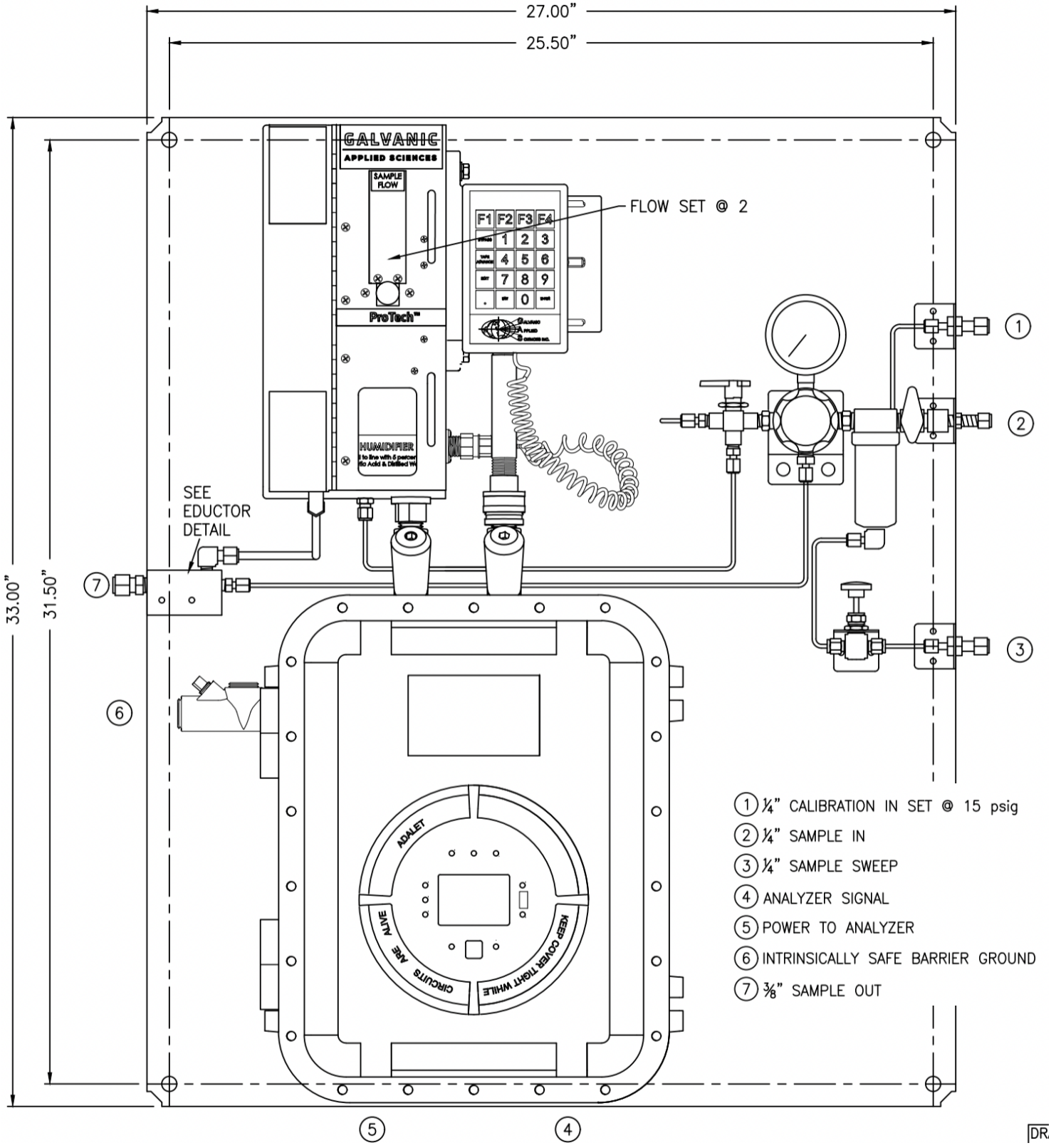

Engineering Drawing for Class I Division 1 Configuration (903D1)

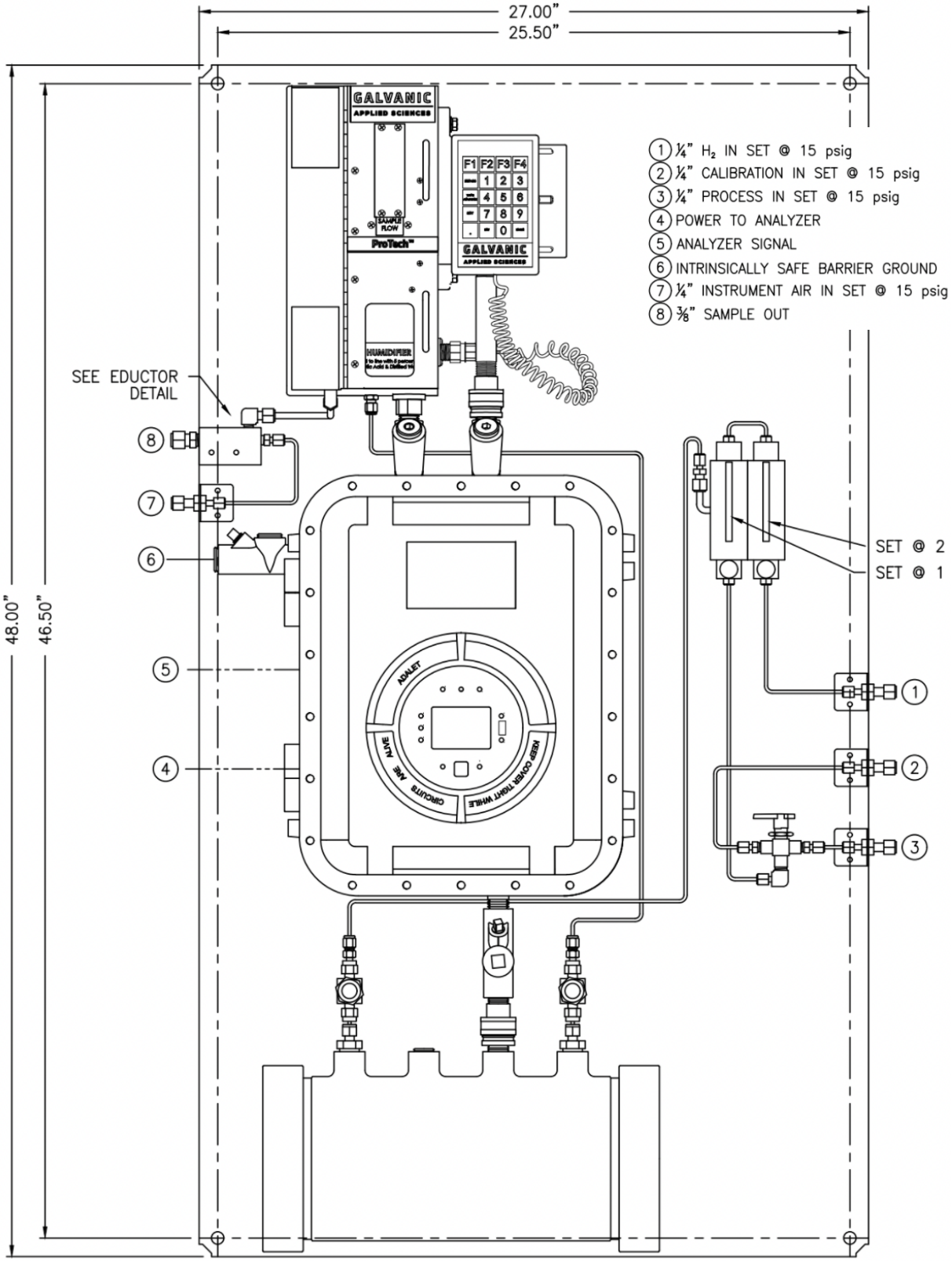

Engineering Drawing for Class I Division 1 Configuration (903D1 Total Sulfur)

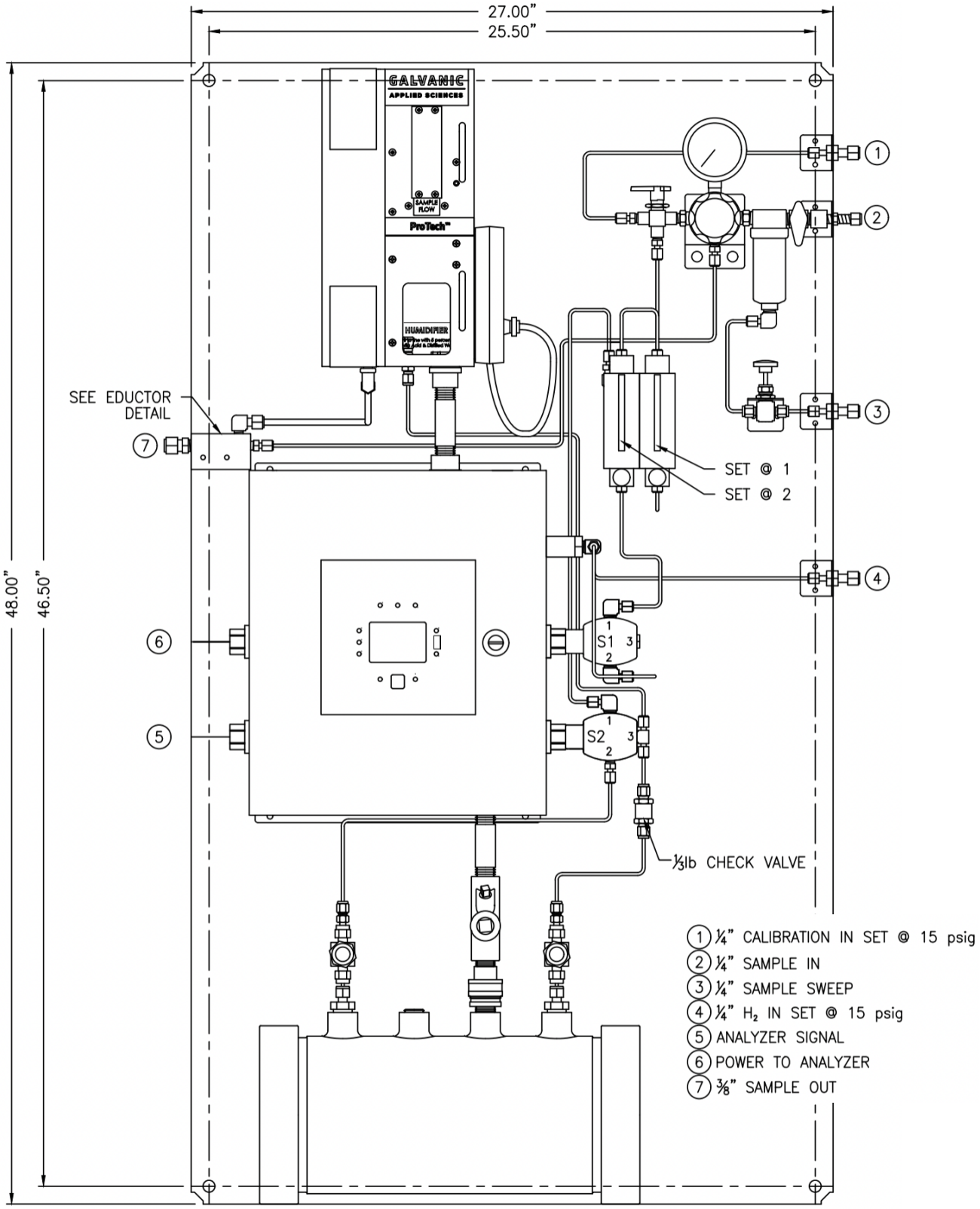

Engineering Drawing for Class I Division 2 Configuration (903D2 Total Sulfur)

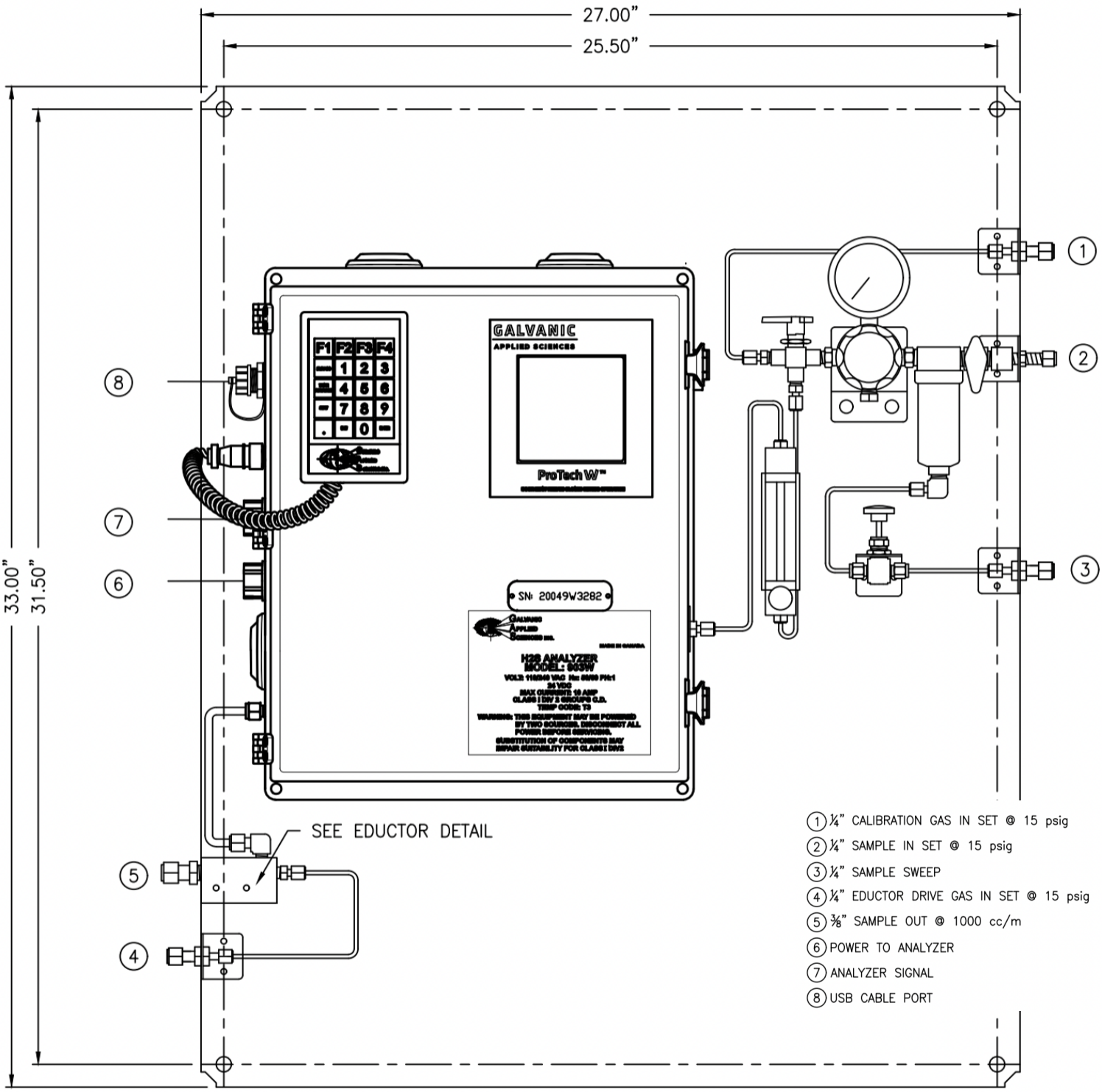

Engineering Drawing for Class I Division 2 Configuration (903W)

ProTech903™ Tape Analyzer

H2S, Total Sulfur, Arsine, Phosphine, Phosgene, and Chlorine

GALVANIC APPLIED SCIENCES

Compounds	Hydrogen Sulfide, Total Sulfur, Arsine, Phosphine, Phosgene, Chlorine			
Ranges	0 to 0.1 ppm; 0 to 1 ppm; 0 to 50 ppm; > 50 ppm			
Accuracy	± 2% to 5% f.s. [Application-Specific]			
Repeatability	± 2% to 5% f.s. [Application-Specific]			
Sensitivity	1% f.s.			
Method(s)	Lead-Acetate Tape and Other Specialty Tapes for Non-H2S Applications			
Response Time	30 Seconds to Alarm			
Calibration	Gas Cylinder, Color Card, On-Board-Calibration (OBC) Using Permeation Tubes			
Analog Outputs	6 x 4-20mA Outputs (Loop-Powered)			
Analog Inputs	3 x 4-20mA Inputs [RTD, 4-20mA, Transducer]			
Modbus	RS232 or RS485			
Digital Outputs	3 x SPDT Relays			
Digital Inputs	8 Discrete Inputs			
Remote GUI	Yes			
Analyzer Display	Monochrome LCD With Extendable Keypad			
Ambient Conditions	0 to 50°C [32° to 122°F] with 0 to 95% non-condensing relative humidity			
Power	90 – 230 VAC, 10 – 32 VDC, or Solar Power			
Power Consumption	10 Watts [250 Watts for Total Sulfur]			
Total Sulfur Option	Additional 9 kg [20 lbs.] and 381 mm [15”] Width			
Model	**903W**	**903D2**	**903D1**	**903CE**
Dimension	482 x 432 x 229 mm [19” x 17” x 9”]	86 x 838 x 318 mm [27” x 33” x 12.5”]	686 x 838 x 318 mm [27” x 33” x 12.5”]	686 x 838 x 318 mm [27” x 33” x 12.5”]
Enclosure Material	Fiberglass	Stainless Steel	Cast Aluminum	Cast Aluminum
Enclosure Rating	NEMA 4X	NEMA 1, IP10	NEMA 1, IP10	NEMA 1, IP10
Enclosure Weight	18.1 kg [40 lbs.]	20.4 kg [45 lbs.]	29.4 kg [60 lbs.]	29.4 kg [60 lbs.]
Area Classification	Class I Div. 2 Groups BCD T3	Class I Div. 2 Groups BCD T3	Class I Div. 1 Groups BCD T3	ATEX / IECEx Zone 1 II 2 G Ex db [ia] ia op is IIB+H_2 T4 Gb T_{amb} 0 ≤ Ta ≤ 50C
	China Pattern Approval, India CCOE, Russia Pattern Approval, Russia TR-CU			

Choose the Right Model for Your Application

903W

903D2

903D2-TS

903D1

903CE

Digital Copies Available